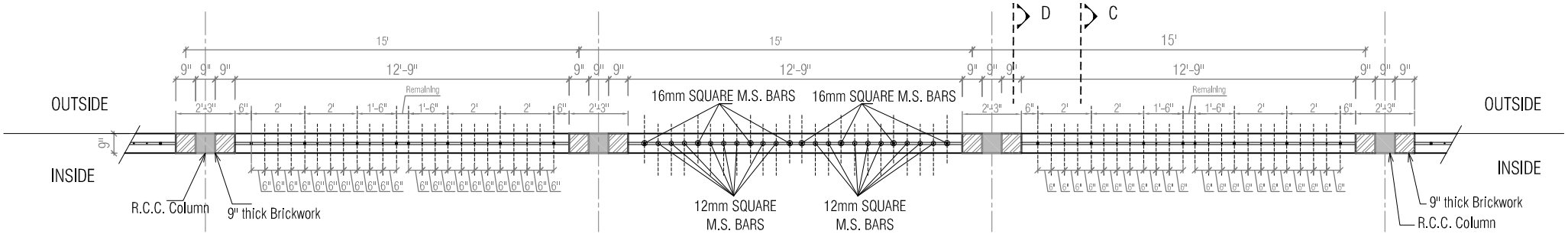

PART PLAN OF BOUNDARY WALL (SECTION AA)

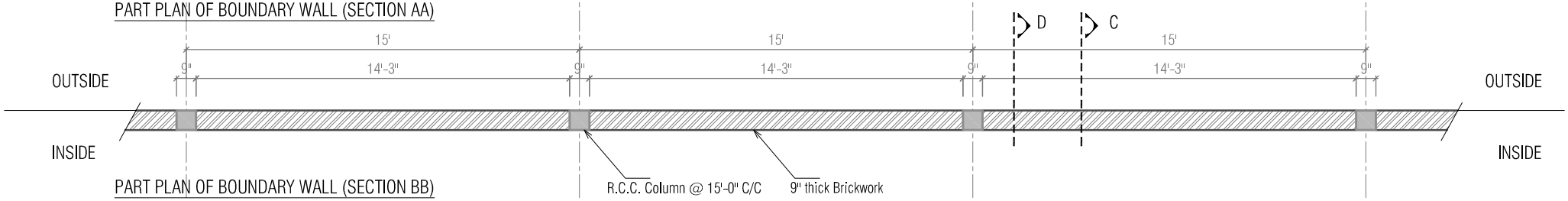

PART PLAN OF BOUNDARY WALL (SECTION BB)

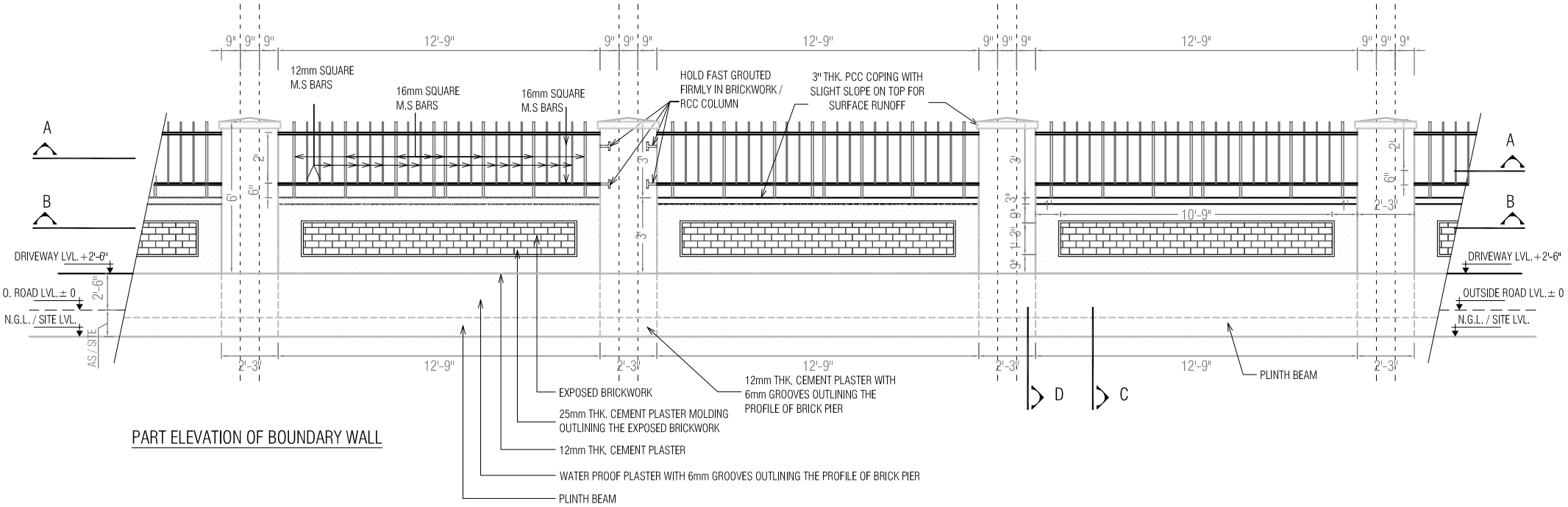

PART ELEVATION OF BOUNDARY WALL

PROJECT	SHEET TITLE	DRAWING		REV.	DATE	DEALT	DETAILS
PROPOSED BOUNDARY WALL FOR CENTRAL BANK OF INDIA AT SURVEY NO 176,HARDWARE PARK INDUSTRIAL AREA-BENGALURU	SITE BOUNDARY WALL DETAILS - 1	WORKING DRAWINGS	SCALE : N.T.S.	R0	03.09.2016	N.C.	-
		NOTES: FOR SECTION DETAILS REFER SITE BOUNDARY WALL DETAILS - 2	DATE : 03-09.2016				
			DEALT BY : AMAR				
			SHEET NO. : 01				